Office of Operating Experience Analysis, EH-33 • U.S. Department of Energy • Washington, D.C. 20585

OPERATING EXPERIENCE WEEKLY SUMMARY

Office of Nuclear and Facility Safety

February 12 - February 18, 1999

Summary 99-06

Operating Experience Weekly Summary 99-07

February 12 - February 18, 1999

Table of Contents

EVENTS 1

1. LASER EYE INJURY 1

2. TELECOMMUNICATION WORKERS DRILL INTO TWO ENERGIZED 120-V LINES 2

3. FIRE PROTECTION SYSTEM DEFICIENCIES AT ROCKY FLATS 5

4. WORKERS EXPOSED TO HEXACHLOROBENZENE 7

5. INADEQUATE LOCKOUT CAUSES ELECTRICAL SHOCK 9

FINAL REPORT 12

1. RIGGING STANDARDS VIOLATED 12

OEAF FOLLOW-UP ACTIVITIES 13

1. **OCCURRENCE REPORTING PROGRAM SURVEY** 13

2. AMENDED CORRECTION TO WEEKLY SUMMARY 99-01, ARTICLE 5 14

3. CORRECTION TO WEEKLY SUMMARY 99-05, ARTICLE 1 14

Visit Our Website

The Weekly Summary is available, with word search capability, via the Internet at **http://tis.eh.doe.gov/web/oeaf/oe_weekly/oe_weekly.html**. If you have difficulty accessing the Weekly Summary at this URL, please contact the ES&H Information Center, 1(800) 473-4375, for assistance. If you have additional pertinent information or identify inaccurate statements in the summary, please bring this to the attention of I-Ling Chow, (301) 903-5984, or Internet address i-ling.chow@hq.doe.gov, so we may issue a correction.

EVENTS

1. LASER EYE INJURY

On February 5, 1999, at the Los Alamos National Laboratory, a post-doctoral experimenter received a laser burn to his left eye while aligning a class IV laser. The experimenter was not wearing eye protection at the time he received the burn. Physicians evaluated the experimenter's eye twice and determined that there is a permanent retinal periphery burn but the burn will not impair his eyesight. (ORPS Report ALO-LA-LANL-FIRNGHELAB-1999-0001)

The post-doctoral experimenter and his team leader were aligning a class IV laser. The experimenter received the burn as he was making changes to the beam optics while the team leader was out of the room. He believed the laser was turned off when he moved his eye into line with a new optic mount to check its height with respect to the other mounts. He saw a bright flash, closed his eyes, and noticed a dark spot in the periphery of his left eye's field of view. He notified the team leader, who immediately shut down the laser. Personnel at the occupational medicine group evaluated his condition, scheduled him for further ophthalmic evaluation, and released him without work restrictions.

At a critique of this event, attendees determined that a special work permit to work on the laser had expired several months earlier and that a standard operating procedure for the laser was being completed when this event occurred. As a result of this occurrence, the operations coordinator suspended laser operations until an investigation can be completed. The division director chartered a team of experts to investigate the occurrence.

NFS reported two laser safety violations that resulted in eye exposures to experimenters in Weekly Summary 98-51. At the Sandia National Laboratory, a graduate student received an eye exposure to a diffused class IV laser. The graduate student was not wearing eye protection. He reported having blurred vision and seeing black spots. At the Lawrence Livermore National Laboratory, an experimenter received a laser injury to his eye from a stray reflection while he was aligning a laser. (ORPS Reports ALO-KO-SNL-9000-1998-0010 and SAN--LLNL-LLNL-1998-0065)

OEAF engineers reviewed the ORPS database for other occurrences involving laser safety violations resulting in eye exposures and found one occurrence report describing an event at Sandia National Laboratory–Livermore. In this event, a Sandia employee was attempting to align an unfocused beam from a class IIIB laser when a stray beam from an optic polarizer he was holding glanced onto his face. An ophthalmologist determined that there was no injury to the employee's eye. (ORPS Report ALO-KO-SNL-CASITE-1997-0001)

These occurrences highlight the need for stringent safety practices when working with lasers. When personnel must work near open laser beams, extra precautions should be taken to avoid scattering the beam, especially with class IV lasers. If the option is available, such lasers should be operated at reduced power levels when aligning or when there is a risk of eye exposures.

Managers of facilities using lasers should ensure that experimenters understand the hazard controls unique to laser operations. Training should include information from ANSI Z136.1-1993, *American National Standard for the Safe Use of Lasers*. This standard provides guidance for the safe use of lasers and laser systems by defining hazard control measures for each of the four laser classifications. Control measures include (1) engineering controls, such as beam housings, beam shutters, and attenuators, (2) administrative controls, such as procedures, warning signs, labels, and training, and (3) personal protective equipment, such as eyewear, gloves, and special clothing. This standard is endorsed in part by

DOE O 440.1, *Worker Protection Management for DOE Federal and Contractor Employees*, paragraph 12, "Contractor Requirements Document."

ANSI Z136.1-1993 laser hazard classifications are used to signify the level of hazard inherent in a laser system and the extent of safety controls required. Lasers are grouped into four classes, from class I (the least hazardous) to class IV (the most hazardous). Complete definitions for each class are contained in ANSI Z136.1-1993.

The *Hazard and Barrier Analysis Guide*, developed by OEAF, discusses barriers that provide controls over the hazards associated with a job. It provides a detailed analysis for selecting optimum barriers, including a matrix that displays the effectiveness of different barriers in protecting against some common hazards. A copy of the *Hazards and Barrier Analysis Guide* is available by contacting the ES&H Information Center, (800) 473-4375, or by writing to U.S. Department of Energy, ES&H Information Center, EH-72, 19901 Germantown Rd., Germantown, MD 20874.

KEYWORDS: industrial safety, laser

FUNCTIONAL AREAS: Industrial Safety

2. TELECOMMUNICATION WORKERS DRILL INTO TWO ENERGIZED 120-V LINES

On February 9, 1999, at the Rocky Flats Environmental Technology Site, telecommunications technicians drilled into two energized 120-V electrical lighting circuits while installing a telephone line in a trailer, causing two 20-amp circuit breakers to trip. Because there was no sparking, the technicians were unaware that they had drilled into the lines. However, workers inside the trailer noticed that the lights went out, assumed that the technicians caused the failure, and told them that they may have drilled into the trailer lighting circuits. The facility manager and a health and safety representative confirmed that no one was injured and directed the telecommunications technicians to stop work. Facility personnel locked out and tagged out the main power supply to the trailer and confirmed that the telecommunications technicians had drilled into the lighting circuits. Although no injuries resulted, failure to identify energized lines before drilling caused equipment damage and could have caused personnel injury or a fatality. (ORPS Report RFO--KHLL-779OPS-1999-0007)

Investigators determined that the trailer was new and was being put in place to support future decontamination and decommissioning work. They also determined that the integrated work package was for putting the trailer in place and that it included a step that said "install phones." Investigators determined that no one provided any additional directions for installing the telephone lines. The telecommunications technicians performed a walk-down before they began to install the telephone line. They visually inspected the inside and the outside of the trailer as well as its ceiling and concluded that no wiring was present near the drilling locations. Investigators determined that the walk-down was conducted using skill-of-the-craft knowledge instead of specific directions from work package instructions, diagrams, or procedures. After the walk-down, the technicians drilled a hole in the west end of the trailer without incident. When they drilled a second hole, workers told them that the power had gone out in the trailer. Investigators determined that the technician who performed the drilling was standing on a fiberglass ladder, which may have prevented him from receiving an electrical shock.

Investigators determined that the integrated work control package failed to require anyone to use a utility locator before drilling to determine if electrical wiring was present in the trailer wall, or to require installation of a lockout or tagout if the technicians determined wiring was present. They also determined that no one prepared a job hazard analysis before installing the trailer at the job

site and installing the telephone line. The facility manager will develop corrective actions as necessary.

NFS has reported on severed conduits or cables during construction activities in several Weekly Summaries. Some examples follow.

- Weekly Summary 99-05 reported that a construction subcontractor at the Kansas City Plant using a reciprocating power saw cut into a conduit that contained an energized three-phase, 480-V cable. When the saw blade penetrated the 1-1/2 inch diameter metal conduit and the cable, an electrical arc occurred, blowing fuses in a bus tap switch. A supervisor had directed the subcontractor to cut the wrong conduit. (ORPS Report ALO-KC-AS-KCP-1999-0003)

- Weekly Summary 99-03 reported that a subcontracted construction and electrical crew at the Los Alamos National Laboratory cut through the exterior wall of a metal building and severed a 24-V electrical line that serviced a manual fire alarm pull station, compromising the facility's safety status. Construction and electrical crew personnel noticed the pull station mounted on the inside wall of the building but did not attempt to determine the exact location of the concealed electrical line before beginning work. (ORPS Report ALO-LA-LANL-PHYSCOMPLX-1999-0001)

- Weekly Summary 98-43 reported that a construction subcontractor at the Idaho National Engineering Environmental Laboratory Test Reactor Area severed an energized 220-V, 20-amp evacuation siren electrical circuit while drilling through a composite steel/masonry block wall. Investigators determined that the conduit was concealed between the exterior steel siding and the building masonry block. (ORPS Report ID--LITC-TRA-1998-0019)

In addition, an October 1998 Environment, Safety and Health audit, *Follow-up Review of the 1996 Integrated Safety Management Evaluation at Fernald Environmental Management Project*, EH2PUB/10-98/04OIT, identified a weakness in a penetration permit procedure that had been revised by Fernald personnel following three subcontractor penetration events in December 1997. The revised procedure allowed facility personnel to make shallow floor, ceiling, and wall penetrations without requiring additional guidance or checking for (1) outlet boxes, (2) switches, (3) fixtures, or (4) power panels. However, four days after the procedure was revised, workers drilled a shallow hole in the side of a trailer to hang a sign and penetrated an energized 240-V line that was not installed in accordance with the National Electrical Code. (ORPS Report OH-FN-FDF-FEMP-1998-0006) Although the penetration permitting process had been improved by the procedural changes, evaluators believe that the procedural requirements and cautions associated with the use of a shallow blind penetration allowance in floors, ceilings, and walls were inadequate and could place workers at risk.

These events underscore the importance of using effective work control practices and detailed pre-job planning. Pre-job briefings, facility procedures, and training programs should emphasize the dangers associated with penetrating building surfaces. Work packages must be detailed enough to clearly identify permitting requirements and must clearly state who is responsible for securing permits. Planners must use all available drawings and should consider conducting detailed walk-downs to ensure utilities are identified. Where configuration knowledge is limited, use of metal detectors or other equipment or methods should be considered to confirm utility locations before penetrating building surfaces. Safety and health hazard analysis must be included in the work control process to help prevent worker injury and should provide for drawing reviews, job-specific walk-downs, personal protective equipment, and the use of equipment to detect embedded conduit.

Following are some references that facility managers, program and project managers, and project personnel should review and incorporate in the surface-penetration permitting process.

- 29 CFR 1910, subpart S, "Electrical," describes work practices to be employed to prevent injuries when work is performed near or on equipment or circuits that are or may be energized.

- 29 CFR 1926, *Safety and Health Regulations for Construction,* paragraphs .651(b) and .416(a)(3), assign responsibility to employers for identifying energized circuits near the work area.

- *Construction Safety Reference Guide*, section B.8, discusses requirements for a lockout/tagout program for construction activities. This section of the guide endorses OSHA regulations contained in 29 CFR 1910.147, *The Control of Hazardous Energy (Lockout/Tagout)*, and identifies where OSHA training requirements are mandatory.

- DOE/EH-0557, Safety Notice 98-01, *Electrical Safety*, contains summaries, corrective actions, and recommendations related to electrical events. It notes that more than 800 occurrences involving electrical safety were reported in ORPS between January 1990 and June 1998.

- Lessons Learned Report, Issue 98-02, *Penetrating Hidden Utilities,* includes lessons learned from events that involved cutting and drilling into utilities concealed behind walls, floors, and ceilings. It also describes a number of techniques for avoiding hidden utilities and includes useful references.

DOE standards are available at http://www.doe.gov/html/techstds/standard/standard.html. OSHA regulations are available at http://www.osha-slc.gov/OshStd_data. Safety notices can be obtained by contacting the ES&H Information Center, (800) 473-4375, or by writing to U.S. Department of Energy, ES&H Information Center, EH-72, 19901 Germantown Rd., Germantown, MD 20874. The safety notices are also available at http://tis.eh.doe.gov/web/oeaf/lessons_learned/ons/ons.html. Lessons learned reports are available at http://www.tis.eh.doe.gov/web/oeaf/lessons_learned/reports/.

KEYWORDS: work control, hazard analysis, electrical safety

FUNCTIONAL AREAS: Work Control, Construction, Industrial Safety

3. FIRE PROTECTION SYSTEM DEFICIENCIES AT ROCKY FLATS

On February 1, 1999, at the Rocky Flats Environmental Technology Site Analytical Operations, fire department personnel discovered that 10 facility fire alarm system delta points for fire phones, filter plenum overheat detectors, smoke detectors, and flow alarms were not reporting to the new Unity sitewide fire protection system. A shift manager directed integrated systems services to troubleshoot the failures. Integrated systems services personnel determined that the data on a local server were corrupted. The local server provides facility delta point monitoring to the Unity system. Investigators have not determined how the server data became corrupted. However, maintenance personnel had successfully performed post-installation testing before placing the system into operation. Investigators also determined that although compensatory measures were required when this error was discovered, they were not properly implemented in some facilities. Safeguard controls may not exist to prevent corruption of the Unity system or other microprocessor computer systems throughout the DOE complex. Corruption of these systems

can occur from a wide variety of sources and could result in failure modes that may not be preventable. (ORPS Report RFO--KHLL-ANALYTOPS-1999-0003)

While performing a manual verification of each delta point, fire protection personnel discovered that some delta points were not reporting. When they first discovered the problem, they did not know if it was limited to the facility or if the entire Unity system was affected. Fire protection managers directed site personnel to implement fire and criticality alarm panel watches sitewide. However, only approximately half of the facilities implemented these compensatory measures. Investigators determined that 2 days elapsed before analytical operations personnel implemented the fire and criticality alarm panel watches. The analytical operations shift manager sent e-mails to facility personnel to implement the watches when the reporting problem was discovered. However, his communication was interpreted by facility personnel that the watches were optional, so they did not implement them.

After the deficiency was discovered, integrated systems services personnel copied the correct data from a remote server onto the local server, successfully tested the local server, and placed it in back in operation. Investigators determined that fire protection personnel could select between either a user interface or an alarm manager screen to monitor the delta points. The user interface screen uses the data from the local server to provide an alarm if a delta point signal is not received, but it can only monitor a maximum of 15 delta points. The alarm manager screen uses the data from the remote server to monitor an unlimited number of delta points, but it does not provide an alarm if a delta point signal is not received. Fire protection personnel were monitoring the alarm manager screen from the date that the Unity system was placed into service on January 24. Because that screen does not provide an alarm, no one realized until February 1 (when personnel performing the manual verification discovered it) that 10 delta points were not being monitored. Fire protection personnel will continue to manually verify all delta points to ensure they are being monitored.

OEAF engineers have also reported fire alarm failures in several Weekly Summaries. Weekly Summaries 98-30, 98-33, 98-38, and 98-43 reported on an event at Idaho National Engineering Environmental Laboratory in which a high-pressure carbon dioxide fire suppression system unexpectedly activated, resulting in one fatality, several life-threatening injuries, and significant risk to the safety of the initial rescuers. A Type A Accident Investigation Board Report determined that Lockheed Martin Idaho Technologies Company did not have a systematic method for identifying, institutionalizing, or implementing requirements for the design, installation, and work conducted on or affected by the system. The fire alarm control panel vendor also responded to questions submitted by the Board regarding panel operation and the accident. Vendor personnel stated that there are many possible scenarios that could cause a transient to activate panel circuits and that one possible cause relates to the fact that the panel is microprocessor-based. They also stated that microprocessors could change their program execution to provide erroneous instructions if they are sufficiently disturbed by power transients or nearby electromagnetic fields and could result in the activation of output circuits. (Weekly Summaries 98-30, 98-33, 98-38 and 98-43; Type A Accident Investigation Board Report on the July 28, 1998, Fatality and Multiple Injuries Resulting from the Release of Carbon Dioxide at Building 648, Test Reactor Area, Idaho National Engineering and Environmental Laboratory; ORPS Report ID--LITC-TRA-1998-0010)

These events point to the importance of verification and validation of software programs. These reviews are necessary to ensure that facilities are not operated or placed in unsafe conditions. They should also be conducted in accordance with approved procedures and the results should be well documented. Modifications to software and newly purchased software should be subjected to verification and validation if safety-related functions are involved. Software testing should be performed as part of this process and include testing to ensure that potential transient-related problems, such as power fluctuations and outages, are identified. In addition, periodic reviews of safety documentation should focus on code assumptions to ensure they remain valid under all conditions, especially when facilities change or add missions.

These events also point to the need for personnel to back up system software data. Although some failures cannot be prevented, systems can easily be restored if backups exist. In addition, facility personnel who are in charge of selecting what type of fire protection systems to install should consider installing mechanical relay-type systems instead of microprocessor computer systems in cases where data corruption could cause the inadvertent discharge of a carbon dioxide system or the bypassing of a warning system.

Facility managers should ensure that computer codes are independently verified and audited to provide confidence that they adequately reflect operational, functional, and technical requirements. Computer systems can be affected by programming errors, data-entry errors, and failure to input or update facility requirements. Personnel in charge of implementing or maintaining software programs should have a thorough understanding of all code aspects, as these software codes can be complex. Also, they should ensure the validity of any default parameters used in the software. Facility managers should also ensure that personnel responsible for reviewing and implementing software codes verify that the data are accurately presented and that the software functions are the appropriate ones for the facility.

- DOE O 1330.1D, *Computer Software Management*, provides guidance for establishing a computer software management program, including quality assurance and quality control.

- DOE O 1360.4B, *Scientific and Technical Computer Software*, provides guidance for the management and control of scientific and technical software.

- DOE G 200.1-1, *Software Engineering Methodology*, chapter 8, provides guidance for software integration and testing activities.

- DOE/EH-0502, Safety Notice 95-02, *Independent Verification and Self-Checking*, provides guidance and good practices for performing independent verification. It can be obtained by contacting the ES&H Information Center, (800) 473-4375, or by writing to U.S. Department of Energy, ES&H Information Center, EH-72, 19901 Germantown Rd., Germantown, MD 20874. Safety notices are also available at http://tis.eh.doe.gov:80/web/oeaf/lessons_learned/ons/ons.html.

Computer organizations may also wish to review IEEE Standard 828-1990, *IEEE Standard for Software Configuration Management Plans*, and IEEE Standard 7.4.3.2-1993, *American National Standard Criteria for Digital Computers in Safety Systems of Nuclear Power Generating Stations.*

KEYWORDS: computer, fire alarm, monitoring

FUNCTIONAL AREAS: Fire Protection, Design, Operating Experience

4. WORKERS EXPOSED TO HEXACHLOROBENZENE

On February 8, 1999, at the East Tennessee Technology Park, facility managers received the results of personal air monitor samples that indicated three workers had been exposed to hexachlorobenzene above the Threshold Limit Value/Time Weighted Average (TLV/TWA) limit determined by the American Conference of Governmental Industrial Hygienists (ACGIH). The ACGIH TLV/TWA recommended limit for hexachlorobenzene is 0.002 mg/m^3. In addition, one of the sample results exceeded the protection factor for the respirators worn by 50 percent. The workers were exposed on December 15 and 16, 1998, when they repackaged solid waste material for incineration. Environmental, safety, and health personnel had reviewed the work but expected the exposure to be less than the ACGIH limit. This event is significant because

hexachlorobenzene has been identified by the ACGIH as a confirmed animal carcinogen. (ORPS Report OR--BJC-K25WASTMAN-1999-0004)

Investigators determined that work planners had required the workers to use local exhaust ventilation, wetting methods, personal air monitors, and full-face high-efficiency particulate air filter respirators for the repackaging operation. They also determined the workers were wearing nitrile gloves, anticontamination cloth coveralls, chemical aprons, and safety shoes as they worked. The respirators used by the workers had a maximum exposure concentration for hexachlorobenzene of 0.2 mg/m^3. Facility personnel obtained five personal air monitor samples for analysis; four of the samples indicated exposure to hexachlorobenzene in excess of the ACGIH TLV/TWA limit. One of those four samples also indicated an exposure that exceeded the maximum exposure concentration for the respirators. Facility personnel are processing bioassay results and will continue to monitor the workers who were exposed. Additionally, other employees who were located near the work area during the repackaging operation are being offered precautionary bioassays on request.

Investigators determined that the ventilation system and repackaging facility are not designed for handling chemicals with low exposure limits. Work planners did not consider the capabilities and limitations of the facility and its equipment when planning the work. The repackaging facility is being relocated to an area with an improved ventilation system and a dedicated breathing air system for the use of air-supplied respirators.

NFS has reported several instances of personnel being exposed to probable or known carcinogenic substances. Following are some examples.

- Weekly Summary 97-15 reported that three subcontractors at the Rocky Flats Environmental Technology Site became nauseous and physically ill after draining the dielectric fluid from capacitors under a general maintenance work package. The work package specifically prohibited the draining of open or closed chemical systems. Additionally, the work package was prepared without performing a hazard analysis, no material safety data sheet for the dielectric was provided, and the capacitor manufacturer was not contacted for safety information. The safety data sheet for the dielectric fluid indicated that the fluid contained a known carcinogen. (ORPS Report RFO- - KHLL-NONPUOPS1-1997-0006)

- Weekly Summary 96-43 reported that nine maintenance workers at the Los Alamos National Laboratory were exposed to asbestos while removing filter media from a cooling tower. The workers removed 97 percent of the filter media without wearing appropriate personal protective equipment for asbestos removal. A survey conducted three years before the exposure had identified the presence of asbestos, but a review team preparing the work order, job ticket, and hazard analysis failed to identify the asbestos within the filter media. The failure to identify the asbestos before starting the project exposed the workers to a known carcinogen. (ORPS Report ALO-LA-LANL-ADOADMIN-1996-0006)

- Weekly Summary 95-50 reported that personnel at the Los Alamos National Laboratory were exposed to crystalline silica (quartz) in excess of regulatory limits. In June 1994, three workers taking all-terrain vehicle training were exposed to high levels of airborne dust but were not wearing respirators. Silica sampling on these individuals indicated that they had all exceeded the ACGIH limit for crystalline silica. The International Agency for Research on Cancer and the National Toxicology Program classify quartz as “probably carcinogenic to humans.” (ORPS Report ALO-LA-LANL-WASTEMGT-1995-0007)

ACGIH classifies hexachlorobenzene as an animal carcinogen with unknown carcinogenicity in humans. EPA classifies hexachlorobenzene as a “probable human carcinogen of medium

carcinogenic risk" and has developed advisories to protect individuals from the potential health effects of exposure to hexachlorobenzene in drinking water. EPA also requires that spills or accidental releases into the environment of 10 pounds or more of hexachlorobenzene be reported to it. The International Chemical Safety Card for hexachlorobenzene, prepared by the National Institute for Occupational Safety and Health (NIOSH) and other safety and health organizations, provides guidance for hexachlorobenzene exposure prevention, spillage disposal, storage, packaging and labeling, and other important data.

Although OSHA has established no occupational exposure limits for hexachlorobenzene, safe work practices should always be followed when handling this chemical. All contact with this compound should be minimized. Hexachlorobenzene can also be absorbed through the skin, thereby increasing the exposure risk. Engineering controls are the most effective way of reducing exposure. Some ways of reducing exposure follow.

- Where possible, enclose handling operations (e.g., in a glovebox) and use local exhaust ventilation at the site of the chemical release. If neither of these precautions can be taken, respirators should be worn.

- Ensure that workers wear protective clothing and gloves to avoid skin contact with hexachlorobenzene.

- Instruct workers to wash thoroughly immediately after exposure to hexachlorobenzene and at the end of the work shift.

- Post hazard and warning information in the work area.

- As part of an ongoing training and education effort, communicate all information on the health and safety hazards of hexachlorobenzene to workers who could become exposed.

Managers, supervisors, and Environmental, Safety, and Health technical support personnel involved in work planning should ensure that work control processes are being followed and that all work-related hazards are evaluated to reduce worker exposure to hazards and to prevent injury/illness. Work planners should ensure work packages adequately address actual and potential job task and workplace hazards. Workers are required to be involved in the Integrated Safety Management System during the work planning phases to help identify and mitigate work hazards. Requirements and guidance for worker protection can be found in the following documents.

- DOE O 440.1, *Worker Protection Management for DOE Federal and Contractor Employees*, states that the contractor must identify workplace hazards and evaluate the risk of associated worker injury or illness.

- DOE G 440.1-3, *Occupational Exposure Assessment*, provides methods to characterize and monitor workers' potential and actual exposures to hazardous agents as part of a comprehensive worker protection program.

- DOE-STD-1027-92, *Hazard Categorization and Accident Analysis Techniques for Compliance with DOE Order 5480.23, Nuclear Safety Analysis Reports*, provides guidance for protecting workers from hazardous materials.

DOE technical standards can be found at URL http://www.doe.gov/html/techstds/standard/standard.html

KEYWORDS: chemical, exposure control, hazardous waste, work planning

FUNCTIONAL AREAS: Materials Handling/Storage, Work Planning

5. INADEQUATE LOCKOUT CAUSES ELECTRICAL SHOCK

On February 6, 1999, an electrician installing a temporary modification at the Savannah River In-Tank Precipitation Facility noticed a tingling sensation as he taped an electrical lead he had just lifted. An initial voltage check of the lead revealed 57 V. Workers had previously applied a lockout to the equipment. Facility personnel had conducted three zero-energy checks, two while establishing the lockout and one before they began work. The electricians immediately stopped work and notified their job supervisor. As a precaution, medical personnel examined the electrician who received the shock and determined that he had not been injured. This occurrence is significant because an unexpected voltage source compromised employee safety. (ORPS Report SR--WSRC-ITP-1999-0011)

Engineers who investigated the problem believed initially that the voltage had been induced into the lead from nearby electrical equipment, because the voltage disappeared when they grounded the lead. However, a second voltage measurement with the lead ungrounded yielded 110 V ac. The engineers checked drawings and wiring in the field and determined that the lead was energized by a second lead landed at a common neutral connection that delivered 110 V ac to ground through a relay coil. When the lead was grounded, all of the voltage was dropped across the coil. When it was ungrounded, full voltage appeared at the unterminated end. The lead was grounded during each of the zero-energy checks.

The electricians were installing a modification to the control circuits of a flush water pump. They had isolated and locked out primary and control power to the pump. Investigators determined that during an earlier modification to instrumentation and control circuits for a purge fan, installers had landed a neutral connection for a relay coil at a convenient point. In doing this, they inadvertently created a “common neutral.” Figure 5-1 is a simplified diagram of the resulting configuration. The terminal was shared by the neutral connection for a portion of the flush pump control circuit. The common neutral fed a single neutral connection in the cabinet in which the electricians were working. The shared connection was not shown on existing drawings because the location for landing the neutral for the earlier purge fan modification was a field option.

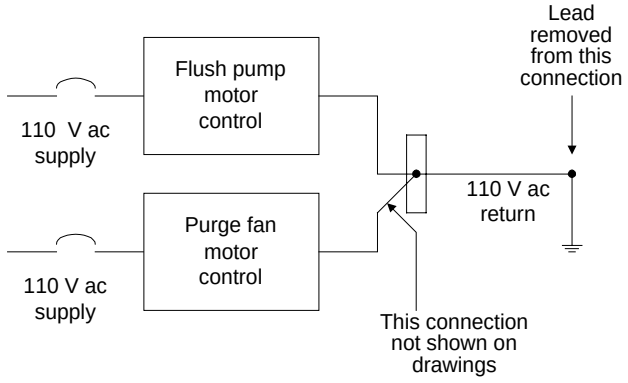

Figure 5-1. Simplified Common Neutral Configuration

As a corrective action, facility personnel modified the lockout to include the unexpected power source. They also modified work controls for this modification project to treat all further electrical work as “hot” work, which requires senior management approval before work begins and additional voltage checks after leads are lifted. Facility personnel will identify and post warnings on all cabinets that contain common neutral connections and will modify the affected control circuits to provide separate landing points for the neutral connections.

NFS reported in OEWS 98-03 that electricians at the Idaho National Engineering and Environmental Laboratory Waste Management Facility realized that they were working on an energized circuit when they removed a wire nut connecting a light fixture to the neutral leg and an adjacent circuit from the same panel became de-energized. They had isolated the circuit using an approved lockout/tagout and had completed zero-energy checks using approved procedures before starting to work on the fixture. The electricians immediately replaced the wire nut, restored the wiring to a safe configuration, and notified their foreman. Investigators determined that the two circuits shared a common neutral connection. (ORPS Report ID--LITC-WASTEMNGT-1997-0013, INEEL Lessons Learned #97283)

As a result of the occurrence at Idaho, the operating contractor’s electrical safety committee recommended that facilities perform one of the following modifications when common neutral connections are known or discovered.

- Install additional neutral wiring to eliminate the common connections.
- Install clips on affected circuit breakers that will open all “hot” legs of single-phase 240/120-V circuits (Edison circuits).
- Post warning signs on the panels indicating that the associated electrical systems contain common neutral connections.

Circuits that are controlled by switches that may close unexpectedly, such as thermostats or contactors, pose additional dangers to electricians when common neutral connections are present. In the occurrence at Savannah River, for example, voltage would not have appeared on the neutral lead if the purge fan had not been running. It is important, therefore, that pre-job planners consider the potential presence of common neutral connections. Electricians should consider the possibility that they may encounter common neutral situations and should take the necessary precautions.

The National Electric Code provides for the safeguarding of persons and property from hazards arising from the use of electricity. If the code is complied with, installations will be essentially free from hazards to building occupants. OSHA requirements for worker protection are addressed in 29 CFR 1910.137, *Electrical Protective Devices*, which discusses personal protective equipment. Subpart 1910.301, “Electrical-General,” discusses electrical safety requirements for the safeguarding of employees in their workplaces. DOE/ID-10600, *Electrical Safety Guidelines*, provides guidance applicable to DOE and contractor personnel who are engaged in the design, construction, installation, inspection, testing, maintenance, operation, research and development, and decommissioning of electrical systems.

KEYWORDS: circuit, electrical safety, job-hazard analysis, power source

FUNCTIONAL AREAS: Industrial Safety, Lessons Learned

FINAL REPORT

This section of the OEWS discusses events filed as final reports in the ORPS. These events contain new or additional lessons learned that may be of interest to personnel within the DOE complex.

1. RIGGING STANDARDS VIOLATED

On October 27, 1998, at the Rocky Flats Environmental Technology Site, a truck driver violated site rigging standards while placing a portable building. The driver passed a chain around a utility pole and attached the chain to the front of the portable building to hold it in place while he drove the truck out from underneath it. He later used the truck's winch and cable to adjust the position of the portable building. The building vendor was unable to provide the certified rated capacity for the cable used and was unprepared to complete the building move in accordance with site hoisting and rigging requirements. (ORPS Report RFO--KHLL-FACOPS-1998-0013)

Investigators determined that site support groups did not have the appropriate transporting equipment to move the 3,000-pound portable building from one site location to another. The building manufacturer was therefore contracted to relocate the building using its own equipment. Workers on break at a nearby facility observed the driver's work practices and informed a shift manager of their safety concerns. The shift manager and a DOE facility representative requested additional safety oversight to complete the building placement. Contractor and DOE safety representatives evaluated the operation and determined that the vendor was unable to satisfy the site hoisting and rigging safety requirements. The shift manager mobilized site resources to complete the building placement.

Occurrence investigators determined that the site hoisting and rigging requirements were violated because of a failure to follow established procedures. The work was not planned in accordance with the site integrated work control program nor was an activity screening program screen completed. There was no job walk-down or pre-job meeting, and integrated safety management principals were not implemented. The project manager did not have the qualifications to supervise the building placement because he was not familiar with this type of work or with hoisting and rigging requirements. Until recently, this type of work was planned and executed by site support services personnel, but because of recent changes to the site support structure, the project manager believed that he was required to manage the building placement work.

The facility manager determined that the following corrective actions were required to prevent recurrence.

- Telecommunication managers and other personnel received training in hazard recognition and controls. Training included requirements of conduct of operations, an integrated work control program, an activity screening program, and integrated safety management.

- Supervisors, workers, and safety personnel will all participate in reviewing telecommunications projects for compliance with requirements.

- The appropriate managers will review the approved services vendor list for adequate compliance with site work controls requirements and revise it accordingly.

KEYWORDS: hoisting and rigging, work planning

FUNCTIONAL AREAS: Hoisting and Rigging, Work Planning

OEAF FOLLOW-UP ACTIVITIES

1. OCCURRENCE REPORTING PROGRAM SURVEY

EH-33 has developed a survey to help determine how well its products and services meet the needs of its customers throughout the DOE complex. Besides the DOE and contractor organizations in the field that generate occurrence reports, customers include other organizations that rely on occurrence reports and the Occurrence Reporting and Processing System (ORPS) database for notification, analysis, and lessons learned. The objective of this survey is to get a big-picture look at the major elements of the DOE Occurrence Reporting Program from the customer's point of view. The survey includes the following elements.

- Occurrence Reporting Order/Manual
- ORPS database
- Occurrence Reporting Program home page
- ORPS Bulletin
- Occurrence Reporting Special Interest Group

Please note that this survey is intended for DOE and DOE contractors only, since ORPS access is limited to those groups. To help EH-33 determine what is and is not working well, please answer the survey by March 15, 1999.

The survey is provided as a pdf file that can be found as a new link on the Occurrence Reporting Program home page at http://tis.eh.doe.gov/oeaf/orps.html. You must have Adobe Acrobat Reader installed to open the file. If you are unable to open and print the survey, please contact Eugenia Boyle at phone number (301) 903-3393 or eugenia.boyle@eh.doe.gov**.** Instructions for completing and submitting the survey are included on the survey form. The responses will be compiled and the results published in the April ORPS Bulletin (also available from the Occurrence Reporting Program home page).

2. AMENDED CORRECTION TO WEEKLY SUMMARY 99-01, ARTICLE 5

The article incorrectly identified the East Tennessee Technology Park (ETTP) as being part of the Oak Ridge National Laboratory (ORNL). Although the ETTP, formerly K-25, is located in Oak Ridge, it is no longer associated with ORNL and is operated and managed by Bechtel Jacobs Company, LLC. Other articles that made this incorrect reference are in Weekly Summaries 98-15, 98-31, 98-32, 98-39, 98-47, and 98-50.

3. CORRECTION TO WEEKLY SUMMARY 99-05, ARTICLE 1

The article incorrectly identified the subject occurrence report as ORPS Report SR--WSRC-CSWE-1999-0002. The correct sequence number is 0001.