Office of Operating Experience Analysis, EH-33 • U.S. Department of Energy • Washington, D.C. 20585

OPERATING EXPERIENCE WEEKLY SUMMARY

Office of Nuclear and Facility Safety

January 16 - January 22, 1998

Summary 98-03

The Office of Environment, Safety and Health and its Office of Nuclear and Facility Safety (NFS) publishes the Operating Experience Weekly Summary to promote safety throughout the Department of Energy (DOE) complex by encouraging feedback of operating experience and encouraging the exchange of information among DOE nuclear facilities.

The Weekly Summary should be processed as an external source of lessons-learned information as described in DOE-STD-7501-95, change notice 1, September 1997, *Development of DOE Lessons Learned Programs*.

To issue the Weekly Summary in a timely manner, the Office of Operating Experience Analysis and Feedback (OEAF) relies on preliminary information such as daily operations reports, notification reports, and, time permitting, conversations with cognizant facility or DOE field office staff. If you have additional pertinent information or identify inaccurate statements in the summary, please bring this to the attention of Jim Snell, 301-903-4094, or Internet address jim.snell@hq.doe.gov, so we may issue a correction.

Readers are cautioned that review of the Weekly Summary should not be a substitute for a thorough review of the interim and final occurrence reports.

Operating Experience Weekly Summary 98-03

January 16 through January 22, 1998

Table of Contents

EVENTS 1

1. RADIOLOGICAL WORK PERMIT DOSE RATES EXCEEDED 1

2. MANUFACTURING DEFECTS CAUSE MOTOR CONTROL CENTER FAILURE 3

3. ELECTRICIANS INADVERTENTLY START COOLING WATER PUMP 5

FINAL REPORTS 7

1. RADIOACTIVE MATERIAL HANDLING AND CONTROL DEFICIENCIES 7

2. EDISON CIRCUITS POSE SAFETY HAZARD 10

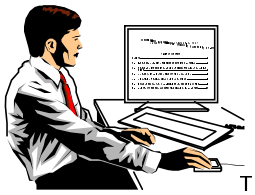

Visit Our Web Site

The Weekly Summary is available, with word search capability, via the Internet at http://tis.eh.doe.gov/web/oeaf/oe_weekly/oe_weekly.html. If you have difficulty accessing the Weekly Summary at this URL, please contact the ES&H Information Center, 1-800-473-4375 for assistance. If you have additional pertinent information or identify inaccurate statements in the summary, please bring this to the attention of Jim Snell, 301-903-4094, or Internet address jim.snell@hq.doe.gov, so we may issue a correction.

EVENTS

1. RADIOLOGICAL WORK PERMIT DOSE RATES EXCEEDED

On January 14, 1998, at the Rocky Flats Environmental Technology Site, a Building 371 source custodian was exposed to radiation levels outside radiological work permit suspension limits while conducting a radioactive source inventory and inspection. The custodian removed six selenium sources from a lead storage container, held them in her hands near her eyes, and inspected each one to verify the manufacturer's identification number. The supporting radiological control technician did not realize the permit dose rates had been exceeded until after the job was completed. The radiological work permit specified a radiation level suspension guide area dose rate of 100 mrem/hr. The radiological control technician performed surveys during the job and measured radiation levels of up to 390 mrem/hr at 30 centimeters. The site radiological manager issued a site-wide stop work order for all radioactive inventories, inspections, and leak tests. Internal dosimetry personnel will perform dose reconstruction for the source custodian and will determine if other radioactive source workers require dose reconstruction. Lack of awareness about a radiological limiting condition, poor radiological work practices, and inadequate procedures resulted in an unnecessary radiation exposure. (ORPS Report RFO--KHLL-371OPS-1998-0004)

Investigators determined that the radiological control technician and source custodian were performing a bi-annual radioactive source inventory and inspection of americium and selenium sources. They also determined that no pre-evolutionary briefing was conducted. The radiological control technician became uneasy when he measured the last source at 390 mrem/hr, so he discussed it with radiological operations personnel and realized that the radiological work permit suspension limit had been exceeded. Dosimetry personnel collected the dosimeters of all personnel involved to determine the doses received.

The facility manager held a fact-finding meeting. The source custodian stated in the meeting that she had always handled the radioactive sources when performing source inventories. Meeting attendees learned that the radiological control technician surveyed the sources after the source custodian had inspected them and did not notify other personnel in the area of the higher measurements. The facility manager determined that personnel involved failed to demonstrate an understanding of safe radiological work practices. He also determined that the source inventory procedure was inadequate because it did not ensure that appropriate prerequisites were performed. Meeting attendees also learned that the administrative procedure requirements for radioactive source inspections are conflicting and confusing. The procedure required surveys of the source, source housing, and source storage cabinets in one section. However, in another section, the procedure stated that surveys of sources in a shield or device should be completed by wiping the area of the shield or device where contamination is most likely to occur. The facility manager determined that this procedure should be upgraded to an operating procedure to ensure that personnel (1) perform the appropriate prerequisites, (2) identify hazards, and (3) conduct pre-evolutionary briefs. Upgrading the procedure will also ensure that safety concerns are incorporated into procedure steps. Facility managers will continue to evaluate this event to determine if the concern should be expanded to include additional radioactive source handling activities and to develop corrective actions. A corrective action plan is required before site-wide radioactive source inventory and inspection activities are resumed.

NFS has reported numerous events in the Weekly Summary where limits established in radiological work permits were exceeded. Following are some examples.

- Weekly Summary 97-35 reported that workers at the Hanford Site did not stop work when a dose rate exceeded a radiation work permit void level of 7,000 mrad/hr for a non-penetrating dose during decontamination of a hot-cell door in the analytical laboratory. A health physics technician discovered a hot spot reading 18,000 mrad/hr while two laborers were wet-wiping the upper and lower hot-cell doors. They did not know that a limit had been exceeded and continued to work for another half-hour before securing the hot cell and exiting the area. (ORPS Report RL--PHMC-ANALLAB-1997-0022)

- Weekly Summary 96-13 reported that a chemical technologist and a health physics technician at the Hanford Site handled a sample vial containing radioactive liquid in excess of the radiation work permit limit of 10 rad/hr. The measured dose from the vial was 198 rad/hr at a half-inch. (ORPS Report RL--WHC-ANALLAB-1996-0014)

These events underscore the importance of ensuring radiological work permits and work packages adequately address the job task and work area hazards. Job supervisors should instruct workers that all work is to be performed inside the bounds of the work permit. If the existing job scope changes and new hazards are introduced, supervisors should stop the work until these hazards can be analyzed and appropriate protective measures can be incorporated. Managers should ensure that work control processes are followed and radiological protection practices are enforced. They should also ensure that all work-related hazards are evaluated to reduce worker exposure to hazards and to prevent injury. Before signing a radiological work permit, personnel should be aware of (1) radiological conditions, (2) dosimetry requirements, (3) training requirements, (4) protective clothing and respiratory protection requirements, (5) stay times, and (6) conditions that may void the radiological work permit. When a limit is reached that voids the permit, personnel should immediately stop work, exit the area, and report the problem to a supervisor.

Personnel working at DOE facilities should have a continually questioning attitude toward safety issues. Each individual is ultimately responsible for complying with rules to ensure personal safety. Facility managers should communicate a sound policy stressing that safety is of prime importance and that all personnel must exhibit an individual commitment to excellence and professionalism.

- DOE/EH-0256T, *Radiological Control Manual*, states: “Each person involved in radiological work is expected to demonstrate responsibility and accountability through an informed, disciplined, and cautious attitude toward radiation and radioactivity.” The manual sets forth DOE guidance on the proper course of action in the area of radiological control, including work preparation; work controls; monitoring and surveys; and training and qualifications. Section 123, “Worker Responsibilities,” states that trained personnel should recognize that their actions directly affect contamination control, personnel radiation exposure, and the overall radiological environment associated with their work.

The first rule of worker responsibility is to obey posted, written, and oral radiological control instructions and procedures, including instructions on radiological work permits. Section 321, “Radiological Work Permits,” states that the permit should include limiting radiological conditions that may void the permit.

KEYWORDS: radiological work permit, radiological control technician, procedures, source custodian, inspection, violation

FUNCTIONAL AREAS: Radiation Protection, Procedures

2. MANUFACTURING DEFECTS CAUSE MOTOR CONTROL CENTER FAILURE

On January 13, 1998, at the Los Alamos National Laboratory, a loss-of-phase condition resulted in the failure of a size 5 Westinghouse motor control center for a critical exhaust fan in the Chemistry & Metallurgy Research Facility. The fan failed to shift from slow to fast speed when the fault occurred. Investigators determined that manufacturing defects and design problems resulted in arcing between the bus bars and the friction stabs on the circuit breaker for the fan motor. There was no impact to the health and safety of personnel or the environment, but the breaker problems resulted in the loss of a safety-significant fan used to maintain proper differential pressures to prevent the spread of contamination within a wing of the facility. (ORPS Report ALO-LA-LANL-CMR-1998-0005)

The fan had been shut down since October 1997, because of a turning vane problem. Operators started the exhaust fan in slow speed to run for an hour to warm up the bearings. After the warm-up period, they shifted the fan to fast speed, and the motor control center failed when arcing occurred between a stab (friction connector) and its bus bar.

The motor control center is one of six, size 5 Westinghouse units that were installed during a facility upgrade 2 years ago. Engineers selected this type of motor control center because it provides the flexibility of changing the size of the circuit breaker unit if there are future equipment changes at the facility. The size 5 circuit breaker unit (bucket) has the capacity for 1,000 amps, weighs 100 pounds, and is spring-loaded into the back plane. Unlike the size 3 breaker, which has a smaller rating, the size 5 bucket does not have a positive locking mechanism that ensures engagement. The model number for this motor control center is HUAQ20645IT.3C-FUC.

In July 1997, a loss-of-phase condition caused internal protection circuits to activate in the same size 5 Westinghouse motor control center that controlled the exhaust fan. After maintenance personnel replaced the protection circuits, operators restarted the fan, but the motor control center failed again because of arcing between the bus bar and a friction stab. Investigators determined that the arcing occurred because the electrical conductor stabs did not make complete contact with the bus bars in the motor control center. Figure 2-1 shows the circuit breaker bucket with damaged stabs. It also shows the amount of bow (flex) in the metal plate that holds the stabs. Stiffeners were added to reinforce this plate.

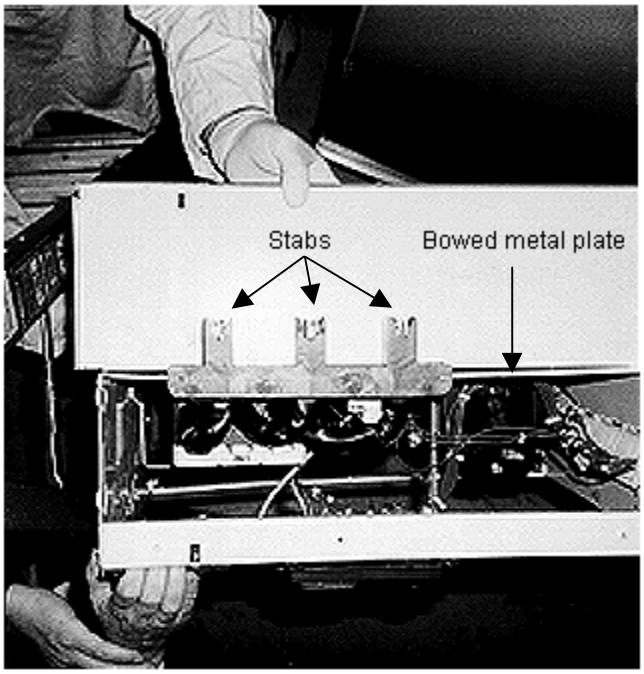

Figure 2-1. Damaged Circuit Breaker Bucket

After the July failure, facility operations personnel disassembled the unit to determine the source of the trouble. They discovered that the manufacturer had installed the mounting brackets for the bus bars backwards. Operations personnel removed the complete back plane from an identical spare motor control center. They planned to install it in the failed unit to return the motor control center to service. However, upon disassembly of the spare motor control center, they discovered that the brackets in that unit were also installed backwards. Operations personnel installed the spare plane in the motor control center for the exhaust fan and correctly installed the bus-bar mounting brackets.

Facility operations personnel contacted the manufacturer for assistance with troubleshooting and repair of the motor control center. A Westinghouse representative inspected the unit and found that workers at the factory improperly installed the mounting brackets. He also verified that facility operations personnel correctly installed the brackets from the spare. The Westinghouse representative also added stiffeners to the back plane. After operations personnel rebuilt the exhaust fan motor control center, they successfully tested it in accordance with the National Electrical Testing Association procedures and a test inspection plan. Tests included infrared thermograph readings, torque measurements, and megger readings.

The facility manager convened a critique on this issue. Facility operations personnel believe that the motor control center still has some design defects even though personnel performed field modifications. They have arranged for Westinghouse to send another representative to inspect the motor control center and ensure that all of the motor control centers in the facility are assembled and function properly.

Electrical maintenance personnel at DOE facilities that have this type of motor control center should check for (1) flexing of the back plane, (2) proper alignment and engagement of the circuit breaker buckets, and (3) deterioration of the stabs. Technical information can be obtained by contacting Merle Koepke (505) 665-2098 or Mike Kuzmack (505) 665-3281.

KEYWORDS: circuit breaker, motor control center, electrical maintenance, and procurement

FUNCTIONAL AREAS: Electrical Maintenance, Procurement

3. ELECTRICIANS INADVERTENTLY START COOLING WATER PUMP

On January 14, 1998, at the Oak Ridge National Laboratory High Flux Isotope Reactor, electricians inadvertently started an emergency secondary cooling water pump, allowing water to splash a pipefitter performing welding work on the secondary cooling system piping. The pump, used for shutdown and emergency cooling of the reactor, received an automatic start signal when the electricians lifted electrical leads on batteries while calibrating switchgear battery charger meters. The lifted leads created a loss of power to a relay that energized the high-speed windings of the pump motor. Investigators determined that the pump was not adequately isolated. Control room operators had placed caution tags on the secondary pump control switches, for configuration control, but did not lock and tag the circuit breakers for the high-speed and low-speed windings for the pump motor. Also, work planners did not consider the potential effect lifting the leads would have on equipment such as the automatic start features for this pump. Although no one was injured and the water was clean and not contaminated, this event could have been prevented with proper work planning and an adequate lockout/tagout. Inadvertent start-up of equipment during maintenance activities can result in equipment damage or personnel injury. (ORPS Report ORO--ORNL-X10HFIR-1998-0002)

The secondary cooling system has three main cooling pumps and one emergency pump. The emergency pump provides 6,000 gpm capacity for reactor shut-down and emergency cooling and automatically starts on a reactor scram signal. It will also start in slow speed (3,000 gpm) on a loss of normal power. Because the valves being replaced could not be isolated, operators drained the secondary cooling system to a level below the valves and caution-tagged the hand switches in the control room for the main cooling pumps and the emergency pump. The hand switch for the emergency pump is a spring-return type and could not be tagged in the OFF position.

A pipefitter and welder were replacing valves in the secondary cooling system while electricians began preparations for a second work activity that required calibration of switchgear battery charger meters. When the electricians lifted leads on the switchgear batteries, a relay was de-energized and the emergency pump started. The welder on the secondary piping job had completed the last of eight tack welds when he heard air rushing in the pipe. Recognizing that the pipe was being charged with water, he instructed those in the area to evacuate. He and the pipefitter climbed from the scaffolding where they were working, but the pipefitter was unable to get off before being splashed by water flowing from the pipe opening. Control room operators immediately stopped the secondary pump and placed tags to open the breakers powering both the low-speed and high-speed windings on the pump. The facility manager stopped all work in the facility pending the results of an investigation.

NFS has reported numerous lockout/tagout events in the Weekly Summary. The following are examples of inadequate lockouts.

- Weekly Summary 97-40 reported that an electrician at the Oak Ridge National Laboratory received an electrical shock and minor burn when he placed his hand on an energized 480-volt incoming feed in a switchgear. Investigators determined that operators installed an inadequate lockout/tagout because the preparer failed to identify a second source of power to the switchgear. The electrician also failed to perform a zero-energy check. (ORPS Report ORO--ORNL-X10HFIR-1997-0016)

- Weekly Summary 97-31 reported that a mechanic at the Savannah River Site installed a lockout to de-energize a 480-volt electrical source to troubleshoot and repair an air conditioning system. While the mechanic was working on the system, an auditor discovered that the cabinet contained an energized 120-volt electrical feed in addition to the 480-volt source. Investigators determined that the inadequate lockout/tagout was the result of a failure to thoroughly research the isolation boundaries. (ORPS Report SR--WSRC-TNX-1997-0005)

This event illustrates how two unrelated work activities (i.e., welding on a piping system and calibration of meters) resulted in an event because of a common component, the electrical relay. This underscores the importance of detailed work planning and coordination of work activities. Work planners should review controlled drawings when determining the effect a work activity will have on other activities. Consultation with subject matter or system experts can be helpful in identifying component or system functionality that may not always be obvious, such as that typically found in control schemes incorporating logics and relays. Also, tagout preparers must consider automatic features that may require additional blocking, such as open circuit breakers or pulled fuses. The caution tags in the control room acted only as a reminder to operators not to operate these pumps; they did not prevent automatic actuation.

DOE-STD-1030-96, *Guide to Good Practices for Lockouts and Tagouts*, provides guidance on lockout/tagout program implementation and management at DOE facilities. Section 4.5.1, “Installation of Lockout/Tagout,” states that protection should not be based upon the presumed remote actuation of a circuit breaker or valve. As an additional protection, it may be necessary to “rack-out” a circuit breaker or remove a component (such as a fuse or a piping spool piece) to isolate the equipment from an energy source. Section 4.2.3.1, “General Practices,” states that control switches should be tagged in a position corresponding to the desired protective state of the equipment, even when another device provides the primary isolation from the energy source.

Facility managers should review DOE/EH-0540, Safety Notice No. 96-05, "Lockout/Tagout Programs.” The notice summarizes lockout/tagout events at DOE facilities, provides lessons learned and recommended practices, and identifies lockout/tagout program requirements. The *Hazard and Barrier Analysis Guide*, developed by OEAF, includes a hazard-barrier matrix showing that lockout/tagout is the most effective barrier against injury. When implemented properly, lockout/tagout provides a high probability (greater than 99 percent) of success for risk reduction.

Safety Notice 96-05 can be obtained by contacting the ES&H Information Center, (800) 473-4375, or by writing to U.S. Department of Energy, ES&H Information Center, EH-72, 19901 Germantown Road, Germantown, MD 20874. Safety Notices are also available on the OEAF Home Page at http://tis.eh.doe.gov:80/web/oeaf/lessons_learned/ons/ons.html. A copy of the *Hazard and Barrier Analysis Guide* is available from Jim Snell, (301) 903-4094, and may also be obtained by contacting the ES&H Information Center.

KEYWORDS: lockout and tagout, maintenance, operations, pump,

FUNCTIONAL AREAS: Operations, Electrical Maintenance, Mechanical Maintenance, Work Planning

FINAL REPORTS

This section of the OE Weekly Summary discusses events filed as final reports in the ORPS. These events contain new or additional lessons learned that may be of interest to personnel within the DOE complex.

1. RADIOACTIVE MATERIAL HANDLING AND CONTROL DEFICIENCIES

On September 3, 1997, at the Los Alamos National Laboratory Accelerator Complex, a radiological control technician discovered a radioactive tantalum disk in a locked, unmarked cabinet in an uncontrolled area while conducting an annual facility-wide survey. The technician surveyed the disk and measured 5.5 mrem/hr on contact. Investigators determined that the room where the technician found the disk is connected to a hallway that is a radiological control area. Investigators also determined that facility personnel posted the boundary between the controlled and the uncontrolled area, but the posting did not clearly designate the controlled area boundary. Facility personnel immediately moved the disk to a posted radioactive material locker in a controlled area. This event is significant because the loss of control of the radioactive material created the potential for the spread of contamination and radiation exposures to workers. (ORPS Report ALO-LA-LANL-ACCCOMPLEX-1997-0013)

Investigators determined that the worker who stored the disk in the cabinet was not aware that the room was not part of the controlled area and knew that radioactive material had been stored in the cabinet in the past. However, radiological personnel had removed the cabinet posting when a previous survey found no radioactive material present. Investigators determined that the worker was not certain that the disk was activated when he removed it from another controlled area storage location. Because the worker thought the cabinet was in a room that was part of a controlled area, he did not have the disk surveyed and tagged before transporting and placing it in the cabinet.

The facility manager initially convened a critique to determine if the event was reportable. During the critique, members learned of three similar occurrence reports at the Accelerator Complex that indicated potential radioactive material handling procedural deficiencies. They also learned that tagging radioactive material is not required when it is moved inside controlled areas and that procedures do not identify radioactive material chain-of-custody in controlled areas. The division director appointed a committee to review all four events and recommend corrective actions to prevent recurrence. Following are summaries of the similar events.

- On July 8, 1996, the facility manager reported that a technician removed an internally contaminated vacuum pump from a storage area without release surveys. The pump was tagged "Possible Internal Contamination" and contained 11,600 dpm beta/gamma, removable contamination. Procedures required radiological control personnel to survey equipment before releasing it. (ORPS Report ALO-LA-LANL-ACCCOMPLEX-1996-0009)

- On July 28, 1997, the facility manager reported that radiological personnel found two radiologically activated cables inside a subcontractor's vehicle after a gate alarm activated as the vehicle was exiting the site. They surveyed the cables and found 112,000 dpm fixed beta/gamma contamination on them. Investigators determined that the radiological control technician present when the cables were removed from service did not tag them as contaminated material because he believed that the cables were to be disposed of as radioactive trash. The subcontractor picked up the cables on July 24 and exited the site with them in his vehicle. The gate alarms were not operational on July 24, so no one detected the contaminated cables. The gate alarms were restored to service on July 28, after the subcontractor re-entered the site with the activated cables still in his vehicle. (ORPS Report ALO-LA-LANL-ACCCOMPLEX-1997-0011)

- On October 8, 1997, the facility manager reported that shippers sent seven vacuum pumps to an off-site company for maintenance. Three of the pumps contained residual oil contaminated with up to 6 µCi per liter of tritium, which is equivalent to 13 million dpm. Radiological control technicians surveyed the seven vacuum pumps for oil contamination and surface contamination before shipment. After the survey, they stored the pumps in a controlled area but did not tag them to indicate the presence of internal contamination. Investigators determined that shippers removed the pumps from the controlled area and shipped them off-site without proper controls and labeling. (Weekly Summary 97-43 and ORPS Report ALO-LA-LANL-ACCCOMPLEX-1997-0014)

Investigators determined that personnel error (inattention to detail) was the direct cause of this event and that management problem (policy not adequately defined, disseminated, or enforced) was the root cause. The committee determined that human error and procedure problems were common causal factors for all of the events. They attributed the human error causal factors to poor communications between material owners and radiological control technicians and to a loss of process knowledge for potentially radioactive items. The committee attributed the procedure problems to (1) poor visibility of radiological postings and exit requirements, (2) insufficient worker awareness of material release requirements, and (3) the lack of segregated material storage for radioactive material in certain locations. They also recognized that the large number of radioactive material movements requires highly effective controls to reduce the occurrences to near zero. They concluded that because practical implementation of engineered controls (such as detectors) is limited by background radiation and the facility configuration, administrative controls

and an educated work force must be relied on. The committee developed the following six corrective actions for the 1997 events.

- The training office will update facility-specific training and emphasize the need to adhere to procedures when removing materials from volume contamination-radiological control areas.

- The training office will develop and distribute quick reference cards and checklists to workers to aid them when removing materials from radiological control areas and when preparing off-site shipments.

- The training office will design and implement annual refresher training for dissemination at group safety meetings.

- Radiological control personnel will improve visibility of exit requirements at volume contamination-radiological control area boundaries and will implement methods to distinguish volume contamination-radiological control area signs from external radiological control area signs.

- Radiological control personnel will implement procedures for notifying area personnel of posting changes and will provide documentation of release conditions to material owners.

- Radiological control personnel will develop and implement procedures for maintaining facility process knowledge of radioactive materials and will label installed equipment for potential internal contamination where applicable.

- Facility personnel will review all storage areas, determine if storage methods are adequate, and implement segregated radiological material areas where necessary.

These events underscore the importance of administrative controls and procedures for custody and transfer of radioactive materials. They also illustrate the need to ensure that the work force has been trained on and understands the requirements. Each of the events resulted in an evolution that could have caused radiation exposures to workers and the spread of contamination. Radioactive material must be surveyed for release and should be properly tagged or labeled. Personnel who need to remove radioactive material from controlled areas should contact radiological protection personnel for release surveys and authorization.

10 CFR 835, *Occupational Radiation Protection For Workers*, subpart L, describes requirements for release of materials and equipment from radiological areas. It states that materials and equipment can be “conditionally released for movement on-site from one radiological area for immediate placement in another radiological area only if appropriate monitoring and control procedures are established and exercised.” It also states that material and equipment with fixed contamination may be released if they are “routinely monitored, clearly labeled, or tagged to alert personnel of the contamination status; appropriate administrative procedures shall be established and exercised to maintain control of these items.”

DOE/EH-0256T, *U.S. Department of Energy Radiological Control Manual*, provides clear direction on marking, monitoring, and controlling radioactive materials. Chapter 4, part 1, “Radioactive Material Identification, Storage, and Control,” provides guidance for labeling radioactive material.

- Section 411, “Requirements,” states that any equipment or system component removed from a process that may have had contact with radioactive material should be considered contaminated until it is disassembled to the extent required to perform an adequate survey, surveyed, and shown to be free of contamination.

- Section 412, “Radioactive Material Labeling,“ states that radioactive material outside contamination, high contamination, or airborne radioactivity areas shall be labeled in accordance with Table 4-1 of the manual.

Items with actual or potential contamination should be labeled. Labels should include contact radiation levels, removable surface contamination levels (specified as alpha or beta-gamma), dates surveyed, surveyor's name, and description of items. Items that are too small to be labeled with all of the stated information should be labeled, at a minimum, with the words "CAUTION RADIOACTIVE MATERIAL" and the standard radiation symbol.

Chapter 4, part 2, “Release and Transportation of Radioactive Material,” provides guidance for releasing radioactive material from controlled and uncontrolled areas.

- Section 422, “Release to Uncontrolled Areas,“ states that material in controlled areas or radioactive material areas, documented to have been released from contamination, high contamination, or airborne radioactivity areas, shall be surveyed before release to uncontrolled areas.

KEYWORDS: radiation protection, labeling, radioactive material

FUNCTIONAL AREAS: Radiation Protection, Material Handling/Storage

2. EDISON CIRCUITS POSE SAFETY HAZARD

On May 29, 1997, at the Idaho National Engineering and Environmental Laboratory Waste Management Facility, electricians realized that they were working on an energized circuit when they removed a wire nut connecting a light fixture to the neutral leg and an adjacent circuit from the same panel became de-energized. Electricians had isolated the circuit using an approved lockout/tagout and performed zero-energy verification using approved procedures before starting to work on the fixture. The electricians immediately replaced the wire nut, restored the wiring to a safe configuration, and notified their foreman. No injuries resulted from this occurrence. (ORPS Report ID--LITC-WASTEMNGT-1997-0013, INEEL Lessons Learned #97283)

Investigators determined that the two circuits shared a common neutral line, a practice commonly referred to as an "Edison circuit." According to the occurrence report, this configuration is approved by the National Electrical Code, and is widely used, especially in non-industrial service such as 120-volt lighting and receptacles. Figure 2-1 shows the wiring of a typical Edison circuit. The DOE-Idaho Operation Office *Architectural Engineering Standards*, dated November 1994, no longer permit this practice for new construction at the Laboratory.

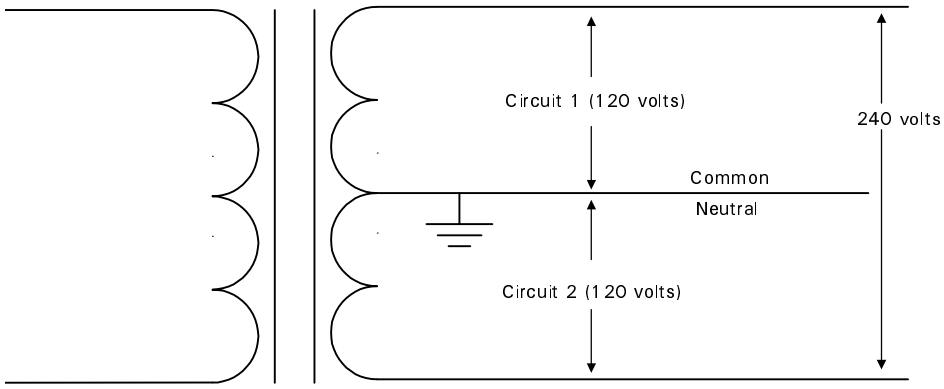

Figure 2-1. Typical Edison Circuit Wiring[1]

Immediate corrective actions for this occurrence were to restore the configuration of the circuit and to make the required notifications. The operating contractor's electrical safety committee recommended that electricians perform one of the following modifications when an Edison circuit is discovered.

- Install additional neutral wiring to eliminate the Edison circuit.
- Install clips on the affected circuit breakers that will open when either "hot" leg of the Edison circuit is opened.
- Post warning signs on the panels indicating that Edison circuits are installed in the associated electrical systems.

The committee also recommended that lessons learned from this event be distributed to all electrical workers at the Laboratory.

According to the occurrence report, standard lockout/tagout procedures do not require zero energy verification of the neutral line. Additional dangers to electricians are posed by circuits with common neutrals that are controlled by switches, such as thermostats, that may close unexpectedly. Therefore, it is important that pre-job planners consider the potential presence of Edison circuits. Electricians working on non-industrial circuits should consider the possibility that the circuits may be Edison circuits and take the necessary precautions.

[1] From DOE-HDBK-1011/4-92*, Fundamentals Handbook*, "Electrical Science," volume 4

The National Electric Code provides for the practical safeguarding of persons and property from hazards arising from the use of electricity. Compliance with the code will result in an installation that essentially is free from hazards to building occupants. OSHA requirements for worker protection are addressed in 29 CFR 1910.137, *Electrical Protective Devices*, which discusses personal protective equipment. Subpart 1910.301, "Electrical-General," discusses electrical safety requirements that are necessary for the practical safeguarding of employees in their workplaces. DOE/ID-10600, *Electrical Safety Guidelines*, provides guidance applicable to DOE and contractor personnel who are engaged in the design, construction, installation, inspection, testing, maintenance, operation, research and development, and decommissioning of electrical systems.

Lessons Learned engineers at the Idaho National Engineering and Environmental Laboratory summarized the details of this event and submitted them to the DOE Lessons Learned list server.

DOE-STD-1010-92, *Guide to Good Practices for Incorporating Operating Experiences,* and DOE-STD-7501-95, *Development of DOE Lessons Learned Programs,* provide guidance on a systematic approach for incorporating operating experiences. The standards describe elements of a program that include the following.

- selecting and analyzing events for facility operation
- ensuring that event reports and subsequent analysis are distributed to appropriate organizations
- incorporating report information into new or existing programs and training
- tracking action plans to ensure that corrective actions are completed
- assessing effectiveness of the changes

The DOE Lessons Learned Information Services Home Page provides access to the list server and is located at URL http://tis.eh.doe.gov:80/others/ll/ll.html.

Operating experience managers at other DOE facilities should review their programs to determine if the operating experience elements described in the standard are incorporated effectively.

KEYWORDS: circuit, electrical safety, job-hazard analysis, power source

FUNCTIONAL AREAS: Industrial Safety, Lessons Learned