ATTACHMENT G

F & H CANYON PROCESS FLOW SHEETS

Attachment G – F Canyon Process Flow Sheet

221-F CANYON PUREX PROCESS

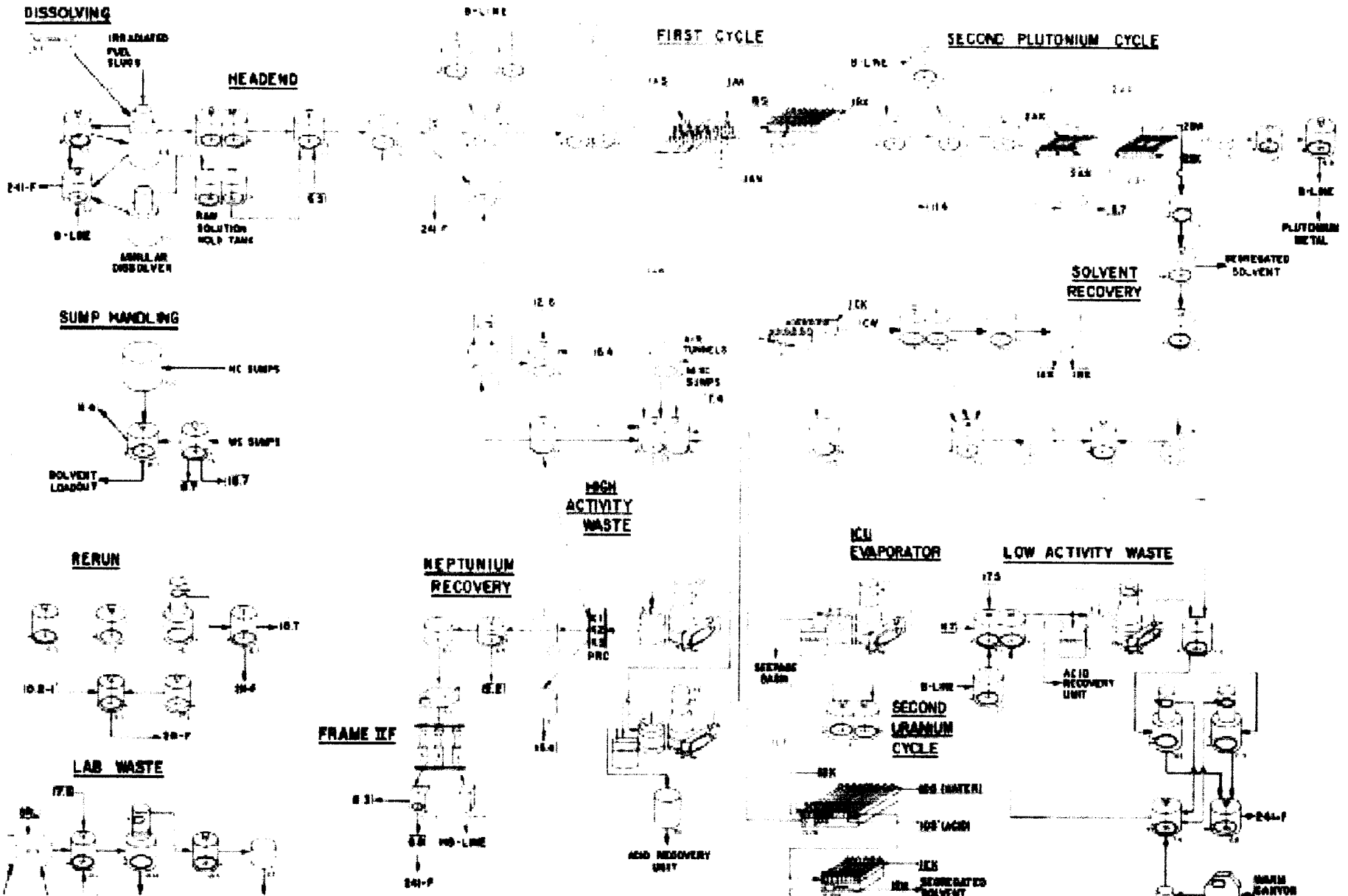

Attachment G – H Canyon Process Flow Sheet
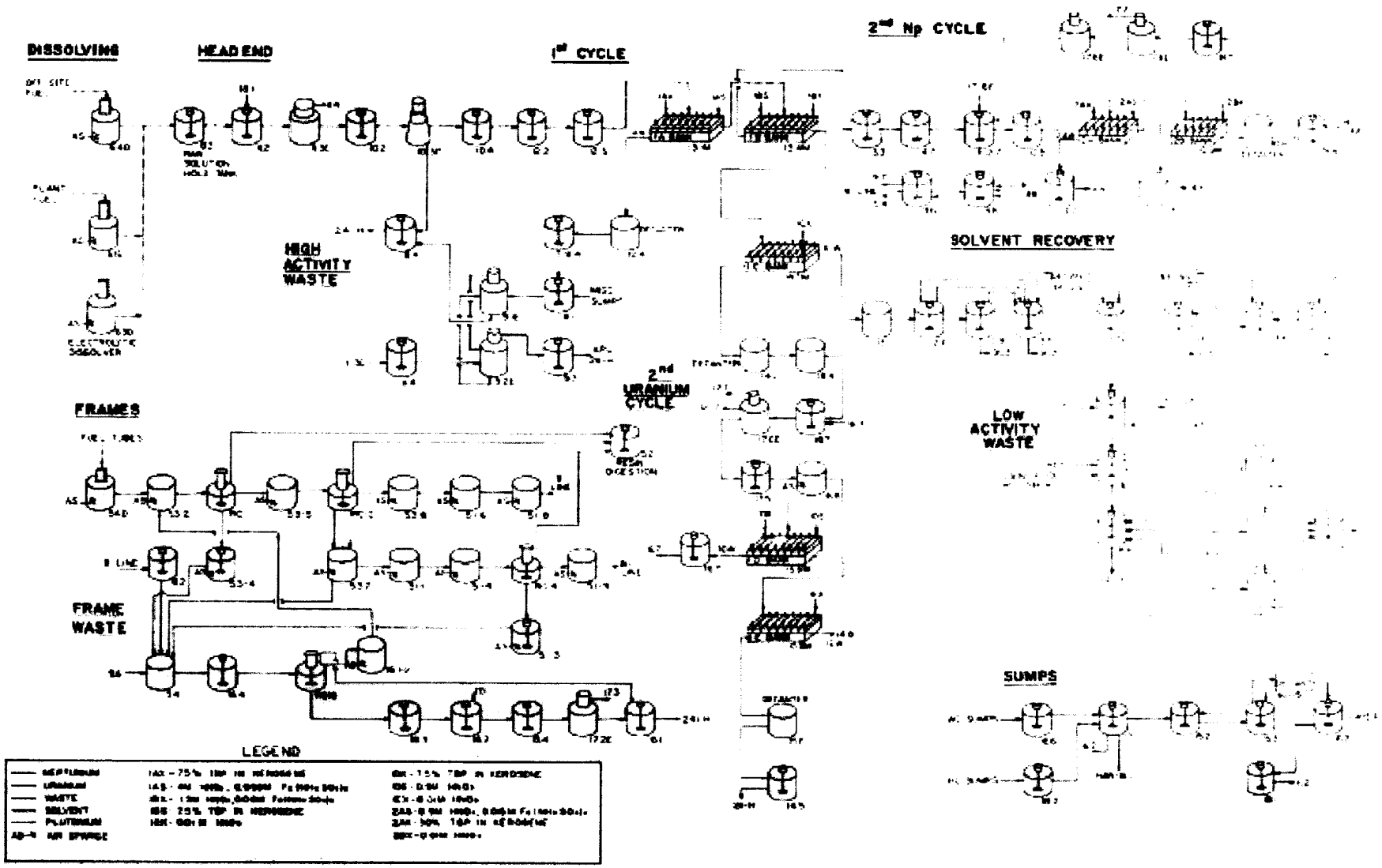
221-H CANYON HM PROCESS